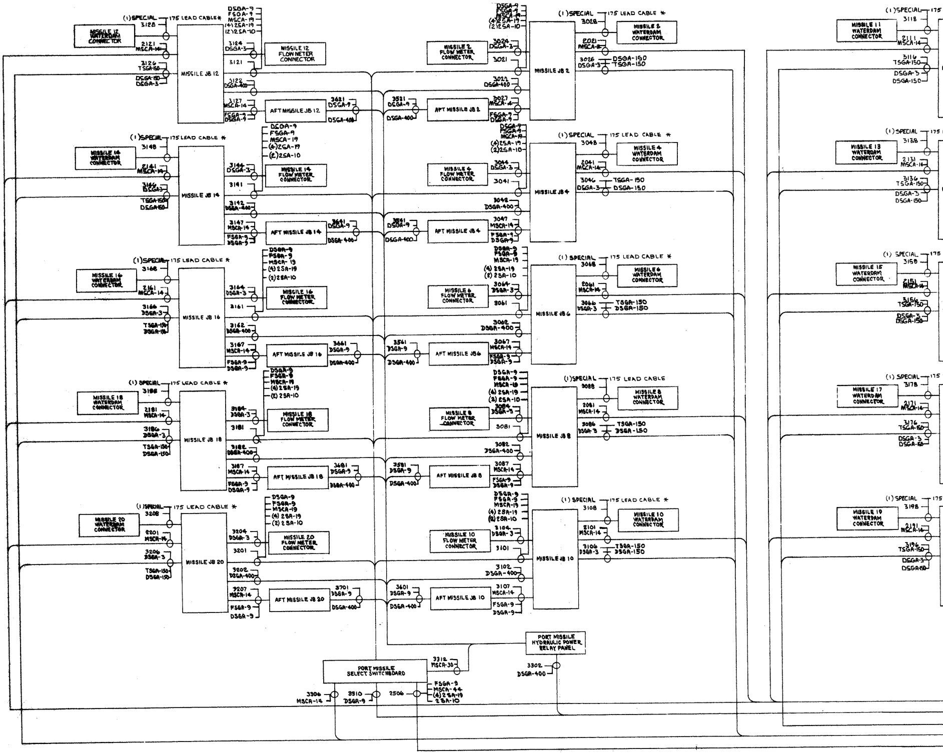
(1)SPECIAL
175 LEAD CABLE *
3128
MISSILE 12 WATERDAM CONNECTOR
2121
MSCA-14
3126
TSGA-150
DSGA-150
DSGA-3
MISSILE JB 12
DSGA-9
FSGA-9
MSCA-19
(4) 2SA-19
(2) 2SA-10
3124
DSGA-3
MISSILE 12 FLOW METER CONNECTOR
3121
3122
DSGA-400
3127
MSCA-14
FSGA-9
DSGA-9
AFT MISSILE JB 12
3621
DSGA-9
DSGA-400
3521
DSGA-9
DSGA-400
AFT MISSILE JB 2
MISSILE 2 FLOW METER CONNECTOR
3024
DSGA-3
3021
3022
DSGA-400
3027
MSCA-14
FSGA-9
DSGA-9
MISSILE JB 2
(1)SPECIAL
175 LEAD CABLE *
3028
MISSILE 2 WATERDAM CONNECTOR
2021
MSCA-14
3026
DSGA-3
DSGA-150
TSGA-150
(1)SPECIAL
175 LEAD CABLE *
3148
MISSILE 14 WATERDAM CONNECTOR
2141
MSCA-14
3146
DSGA-3
TSGA-150
DSGA-150
MISSILE JB 14
DSGA-9
FSGA-9
MSCA-19
(4)2SA-19
(2)2SA-10
3144
DSGA-3
MISSILE 14 FLOW METER CONNECTOR
3141
3142
DSGA-400
3147
MSCA-14
FSGA-9
DSGA-9
AFT MISSILE JB 14
3641
DSGA-9
DSGA-400
3541
DSGA-9
DSGA-400
AFT MISSILE JB 4
MISSILE 4 FLOW METER CONNECTOR
3044
DSGA-3
3041
3042
DSGA-400
3047
MSCA-14
FSGA-9
DSGA-9
MISSILE JB 4
(1)SPECIAL
175 LEAD CABLE *
3048
MISSILE 4 WATERDAM CONNECTOR
2041
MSCA-14
3046
DSGA-3
TSGA-150
DSGA-150
(1)SPECIAL
175 LEAD CABLE *
3168
MISSILE 16 WATERDAM CONNECTOR
2161
MSCA-14
3166
DSGA-3
TSGA-150
DSGA-150
MISSILE JB 16
DSGA-9
FSGA-9
MSCA-19
(4) 2SA-19
(2) 2SA-10
3164
DSGA-3
MISSILE 16 FLOW METER CONNECTOR
3161
3162
DSGA-400
3167
MSCA-14
FSGA-9
DSGA-9
AFT MISSILE JB 16
3661
DSGA-9
DSGA-400
3561
DSGA-9
DSGA-400
AFT MISSILE JB6
MISSILE 6 FLOW METER CONNECTOR
3064
DSGA-3
3061
3062
DSGA-400
3067
MSCA-14
FSGA-9
DSGA-9
MISSILE JB 6
(1) SPECIAL
175 LEAD CABLE *
3068
MISSILE 6 WATERDAM CONNECTOR
2061
MSCA-14
3066
DSGA-3
TSGA-150
DSGA-150
(1) SPECIAL
175 LEAD CABLE *
3188
MISSILE 18 WATERDAM CONNECTOR
2181
MSCA-14
3186
DSGA-3
TSGA-150
DSGA-150
MISSILE JB 18
DSGA-9
FSGA-9
MSCA-19
(4) 2SA-19
(2) 2SA-10
3184
DSGA-3
MISSILE 18 FLOW METER CONNECTOR
3181
3182
DSGA-400
3187
MSCA-14
FSGA-9
DSGA-9
AFT MISSILE JB 18
3681
DSGA-9
DSGA-400
3581
DSGA-9
DSGA-400
AFT MISSILE JB 8
MISSILE 8 FLOW METER CONNECTOR
3084
DSGA-3
3081
3082
DSGA-400
3087
MSCA-14
FSGA-9
DSGA-9
MISSILE JB 8
(1)SPECIAL
175 LEAD CABLE
3088
MISSILE 8 WATERDAM CONNECTOR
2081
MSCA-14
3086
DSGA-3
TSGA-150
DSGA-150
(1)SPECIAL
175 LEAD CABLE *
3208
MISSILE 20 WATERDAM CONNECTOR
2201
MSCA-14
3206
DSGA-3
TSGA-150
DSGA-150
MISSILE JB 20
DSGA-9
FSGA-9
MSCA-19
(4) 2SA-19
(2) 2SA-10
3204
DSGA-3
MISSILE 20 FLOW METER CONNECTOR
3201
3202
DSGA-400
3207
MSCA-14
FSGA-9
DSGA-9
AFT MISSILE JB 20
3701
DSGA-9
DSGA-400
3601
DSGA-9
DSGA-400
AFT MISSILE JB 10
MISSILE 10 FLOW METER CONNECTOR
3104
DSGA-3
3101
3102
DSGA-400
3107
MSCA-14
FSGA-9
DSGA-9
MISSILE JB 10
(1) SPECIAL
175 LEAD CABLE *
3108
MISSILE 10 WATERDAM CONNECTOR
2101
MSCA-14
3106
DSGA-3
TSGA-150
DSGA-150
PORT MISSILE HYDRAULIC POWER RELAY PANEL
3312
MSCA-30
3302
DSGA-400
PORT MISSILE SELECT SWITCHBOARD
3306
MSCA-14
3510
DSGA-9
2506
FSGA-9
MSCA-44
(4) 2SA-19
2 SA-10
(1)SPECIAL
175
3118
MISSILE 11 WATERDAM CONNECTOR
2111
MSCA-14
3116
TSGA-150
DSGA-3
DSGA-150
(1) SPECIAL
175
3138
MISSILE 13 WATERDAM CONNECTOR
2131
MSCA-14
3136
TSGA-150
DSGA-3
DSGA-150
(1) SPECIAL
175
3158
MISSILE 15 WATERDAM CONNECTOR
2151
MSCA-14
3156
TSGA-150
DSGA-3
DSGA-150
(1) SPECIAL
175
3178
MISSILE 17 WATERDAM CONNECTOR
2171
MSCA-14
3176
TSGA-150
DSGA-3
DSGA-150
(1) SPECIAL
175
3198
MISSILE 19 WATERDAM CONNECTOR
2191
MSCA-14
3196
TSGA-150
DSGA-3
DSGA-150

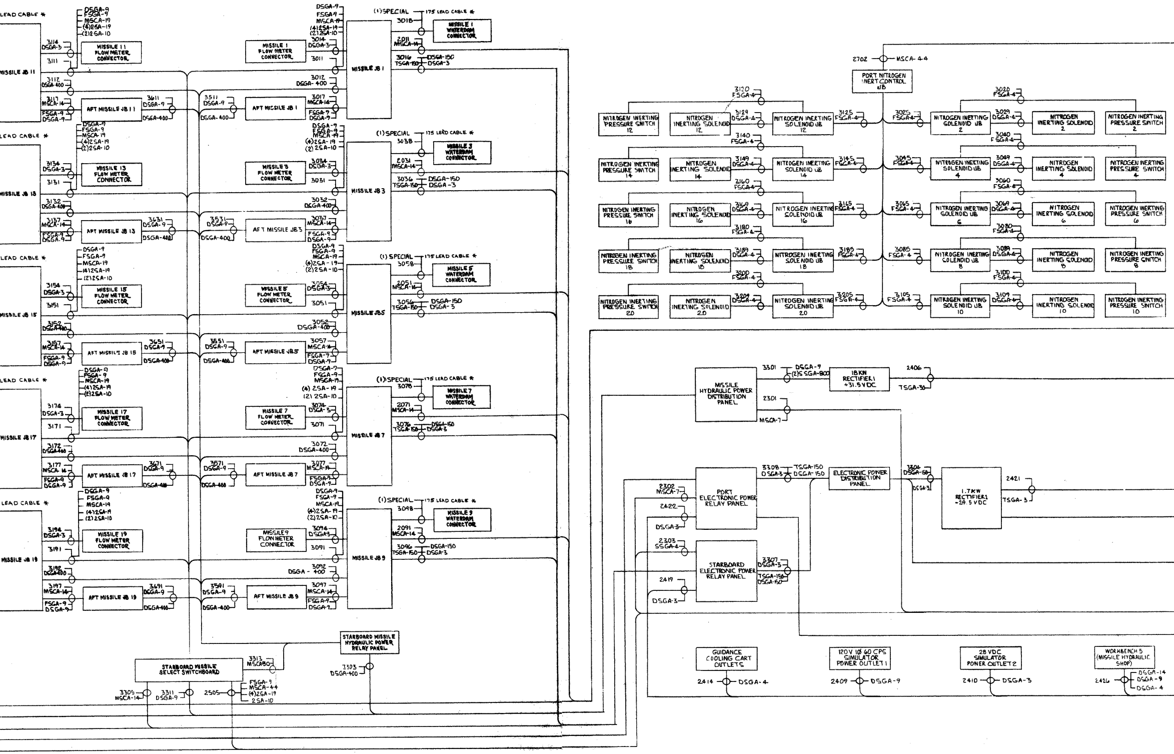
LEAD CABLE *
MISSILE JB 11
MISSILE 11 FLOW METER CONNECTOR
AFT MISSILE JB 11
MISSILE JB 13
MISSILE 13 FLOW METER CONNECTOR
AFT MISSILE JB 13
MISSILE JB 15
MISSILE 15 FLOW METER CONNECTOR
AFT MISSILE JB 15
MISSILE JB 17
MISSILE 17 FLOW METER CONNECTOR
AFT MISSILE JB 17
MISSILE JB 19
MISSILE 19 FLOW METER CONNECTOR
AFT MISSILE JB 19
MISSILE 1 FLOW METER CONNECTOR
AFT MISSILE JB 1
MISSILE JB 1
MISSILE 3 FLOW METER CONNECTOR
AFT MISSILE JB 3
MISSILE JB 3
MISSILE 5 FLOW METER CONNECTOR
AFT MISSILE JB 5
MISSILE JB 5
MISSILE 7 FLOW METER CONNECTOR
AFT MISSILE JB 7
MISSILE JB 7
MISSILE 9 FLOW METER CONNECTOR
AFT MISSILE JB 9
MISSILE JB 9
(1) SPECIAL
175 LEAD CABLE *
MISSILE 1 WATERDAM CONNECTOR
MISSILE 3 WATERDAM CONNECTOR
MISSILE 5 WATERDAM CONNECTOR
MISSILE 7 WATERDAM CONNECTOR
MISSILE 9 WATERDAM CONNECTOR
DSGA-9
FSGA-9
MSCA-19
(4)2SA-19
(2)2SA-10
DSGA-3
DSGA-400
MSCA-14
DSGA-150
TSGA-150
STARBOARD MISSILE HYDRAULIC POWER RELAY PANEL
STARBOARD MISSILE SELECT SWITCHBOARD
3313 MSCA-30
3303 DSGA-400
3305 MSCA-14
3311 DSGA-9
2505
FSGA-9
MSCA-44
(4)2SA-19
2SA-10
2702 MSCA-44
PORT NITROGEN INERT CONTROL JB
NITROGEN INERTING PRESSURE SWITCH 12
NITROGEN INERTING SOLENOID 12
NITROGEN INERTING SOLENOID JB 12
NITROGEN INERTING PRESSURE SWITCH 14
NITROGEN INERTING SOLENOID 14
NITROGEN INERTING SOLENOID JB 14
NITROGEN INERTING PRESSURE SWITCH 16
NITROGEN INERTING SOLENOID 16
NITROGEN INERTING SOLENOID JB 16
NITROGEN INERTING PRESSURE SWITCH 18
NITROGEN INERTING SOLENOID 18
NITROGEN INERTING SOLENOID JB 18
NITROGEN INERTING PRESSURE SWITCH 20
NITROGEN INERTING SOLENOID 20
NITROGEN INERTING SOLENOID JB 20
NITROGEN INERTING SOLENOID JB 2
NITROGEN INERTING SOLENOID 2
NITROGEN INERTING PRESSURE SWITCH 2
NITROGEN INERTING SOLENOID JB 4
NITROGEN INERTING SOLENOID 4
NITROGEN INERTING PRESSURE SWITCH 4
NITROGEN INERTING SOLENOID JB 6
NITROGEN INERTING SOLENOID 6
NITROGEN INERTING PRESSURE SWITCH 6
NITROGEN INERTING SOLENOID JB 8
NITROGEN INERTING SOLENOID 8
NITROGEN INERTING PRESSURE SWITCH 8
NITROGEN INERTING SOLENOID JB 10
NITROGEN INERTING SOLENOID 10
NITROGEN INERTING PRESSURE SWITCH 10
FSGA-4
DSGA-4
MISSILE HYDRAULIC POWER DISTRIBUTION PANEL
3301 DSGA-9
(2)S SGA-800
18KW RECTIFIER 1 +31.5VDC
2406
TSGA-30
2301
MSCA-7
PORT ELECTRONIC POWER RELAY PANEL
STARBOARD ELECTRONIC POWER RELAY PANEL
3308 TSGA-150 DSGA-3 DSGA-150
ELECTRONIC POWER DISTRIBUTION PANEL
3304 DSGA-150 DSGA-3
1.7KW RECTIFIER 1 -29.5 VDC
2421
TSGA-3
2302 MSCA-7
2422
DSGA-3
2303 SSGA-4
2419
3307 DSGA-3 TSGA-150 DSGA-150
GUIDANCE COOLING CART OUTLETS
2414 DSGA-4
120 V 1Ø 60 CPS SIMULATOR POWER OUTLET 1
2409 DSGA-9
28 VDC SIMULATOR POWER OUTLET 2
2410 DSGA-3
WORKBENCH 5 (MISSILE HYDRAULIC SHOP)
2426
DSGA-14
DSGA-9
DSGA-4

* TWISTED SHLD PR & SINGLE COND SHLD - 20 AWG (NOTE 14)

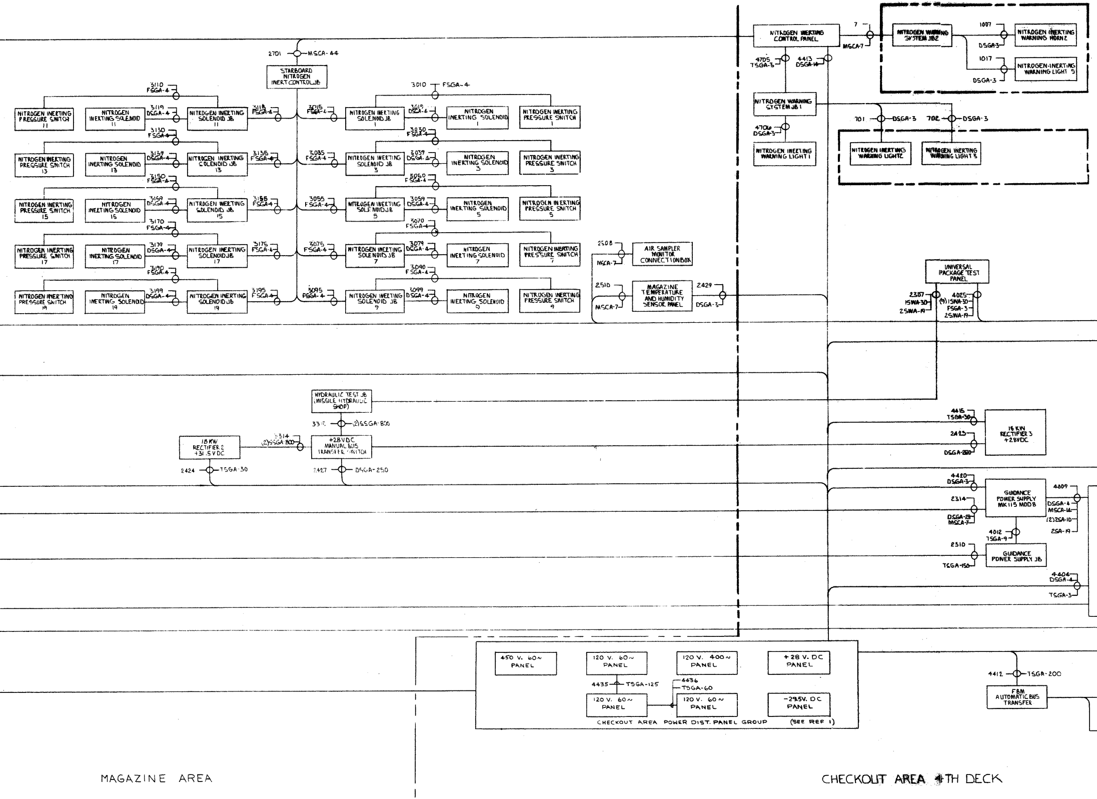
2701
MSCA-44
STARBOARD NITROGEN INERT CONTROL JB
3110
FSGA-4
NITROGEN INERTING PRESSURE SWITCH 11
NITROGEN INERTING SOLENOID 11
3119
DSGA-4
NITROGEN INERTING SOLENOID JB 11
3118
FSGA-4
3130
FSGA-4
NITROGEN INERTING PRESSURE SWITCH 13
NITROGEN INERTING SOLENOID 13
3139
DSGA-4
NITROGEN INERTING SOLENOID JB 13
3135
FSGA-4
3150
FSGA-4
NITROGEN INERTING PRESSURE SWITCH 15
NITROGEN INERTING SOLENOID 15
3159
DSGA-4
NITROGEN INERTING SOLENOID JB 15
3155
FSGA-4
3170
FSGA-4
NITROGEN INERTING PRESSURE SWITCH 17
NITROGEN INERTING SOLENOID 17
3179
DSGA-4
NITROGEN INERTING SOLENOID JB 17
3175
FSGA-4
3190
FSGA-4
NITROGEN INERTING PRESSURE SWITCH 19
NITROGEN INERTING SOLENOID 19
3199
DSGA-4
NITROGEN INERTING SOLENOID JB 19
3195
FSGA-4
3010
FSGA-4
3015
FSGA-4
NITROGEN INERTING SOLENOID JB 1
3019
DSGA-4
NITROGEN INERTING SOLENOID 1
NITROGEN INERTING PRESSURE SWITCH 1
3030
FSGA-4
3035
FSGA-4
NITROGEN INERTING SOLENOID JB 3
3039
DSGA-4
NITROGEN INERTING SOLENOID 3
NITROGEN INERTING PRESSURE SWITCH 3
3050
FSGA-4
3055
FSGA-4
NITROGEN INERTING SOLENOID JB 5
3059
DSGA-4
NITROGEN INERTING SOLENOID 5
NITROGEN INERTING PRESSURE SWITCH 5
3070
FSGA-4
3075
FSGA-4
NITROGEN INERTING SOLENOID JB 7
3079
DSGA-4
NITROGEN INERTING SOLENOID 7
NITROGEN INERTING PRESSURE SWITCH 7
3090
FSGA-4
3095
FSGA-4
NITROGEN INERTING SOLENOID JB 9
3099
DSGA-4
NITROGEN INERTING SOLENOID 9
NITROGEN INERTING PRESSURE SWITCH 9
2508
MSCA-7
AIR SAMPLER MONITOR CONNECTION BOX
2510
MSCA-7
MAGAZINE TEMPERATURE AND HUMIDITY SENSOR PANEL
2429
DSGA-3
NITROGEN INERTING CONTROL PANEL
4705
TSGA-3
4413
DSGA-14
7
MSCA-7
NITROGEN WARNING SYSTEM JB2
1007
DSGA-3
NITROGEN INERTING WARNING HORN 2
1017
DSGA-3
NITROGEN-INERTING WARNING LIGHT 5
NITROGEN WARNING SYSTEM JB 1
4706
DSGA-3
NITROGEN INERTING WARNING LIGHT 1
701
DSGA-3
702
DSGA-3
NITROGEN INERTING WARNING LIGHT 2
NITROGEN INERTING WARNING LIGHT 3
UNIVERSAL PACKAGE TEST PANEL
2307
15WA-30
2SWA-19
4025
(9) 15WA-30
FSGA-3
2SWA-19
HYDRAULIC TEST JB (MISSILE HYDRAULIC SHOP)
3315
(2) SSGA-800
18 KW RECTIFIER 2 +31.5 VDC
3314
(2) SSGA-800
+28 VDC MANUAL BUS TRANSFER SWITCH
2424
TSGA-30
2427
DSGA-250
4415
TSGA-30
2423
DSGA-250
16 KW RECTIFIER 3 +28 VDC
4420
DSGA-3
2314
DSGA-23
MSCA-7
GUIDANCE POWER SUPPLY MK 115 MOD 8
4809
DSGA-4
MSCA-14
(2) 2SA-10
2SA-19
4012
TSGA-9
2310
TSGA-150
GUIDANCE POWER SUPPLY JB
4404
DSGA-4
TSGA-3
450 V. 60~ PANEL
120 V. 60~ PANEL
120 V. 400~ PANEL
+28 V. DC PANEL
4435
TSGA-125
4436
TSGA-60
120 V. 60~ PANEL
120 V. 60~ PANEL
-29.5V. DC PANEL
CHECKOUT AREA POWER DIST. PANEL GROUP
(SEE REF 1)
4412
TSGA-200
FBM AUTOMATIC BUS TRANSFER
MAGAZINE AREA
CHECKOUT AREA 4TH DECK

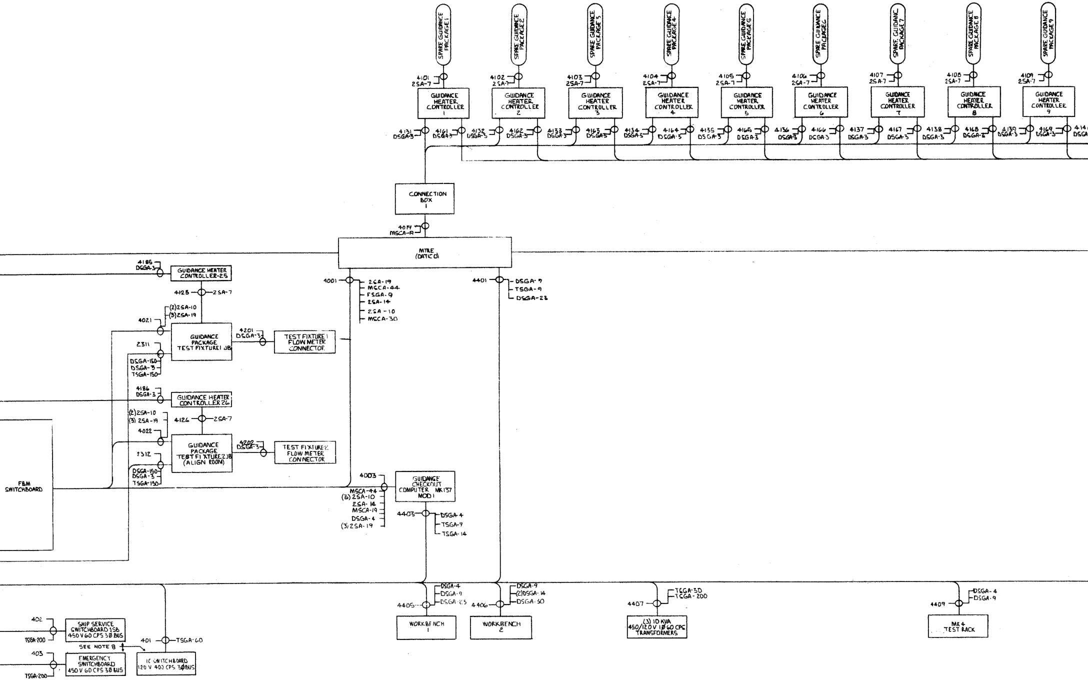
SPARE GUIDANCE PACKAGE 1
SPARE GUIDANCE PACKAGE 2
SPARE GUIDANCE PACKAGE 3
SPARE GUIDANCE PACKAGE 4
SPARE GUIDANCE PACKAGE 5
SPARE GUIDANCE PACKAGE 6
SPARE GUIDANCE PACKAGE 7
SPARE GUIDANCE PACKAGE 8
SPARE GUIDANCE PACKAGE 9
4101 2SA-7
4102 2SA-7
4103 2SA-7
4104 2SA-7
4105 2SA-7
4106 2SA-7
4107 2SA-7
4108 2SA-7
4109 2SA-7
GUIDANCE HEATER CONTROLLER 1
GUIDANCE HEATER CONTROLLER 2
GUIDANCE HEATER CONTROLLER 3
GUIDANCE HEATER CONTROLLER 4
GUIDANCE HEATER CONTROLLER 5
GUIDANCE HEATER CONTROLLER 6
GUIDANCE HEATER CONTROLLER 7
GUIDANCE HEATER CONTROLLER 8
GUIDANCE HEATER CONTROLLER 9
4131 DSGA-3
4161 DSGA-3
4132 DSGA-3
4162 DSGA-3
4133 DSGA-3
4163 DSGA-3
4134 DSGA-3
4164 DSGA-3
4135 DSGA-3
4165 DSGA-3
4136 DSGA-3
4166 DSGA-3
4137 DSGA-3
4167 DSGA-3
4138 DSGA-3
4168 DSGA-3
4139 DSGA-3
4169 DSGA-3
CONNECTION BOX 1
4011 MSCA-R
MTRE (DATICO)
4185 DSGA-3
GUIDANCE HEATER CONTROLLER-25
4125 2SA-7
(2)2SA-10
(3)2SA-19
4021
GUIDANCE PACKAGE TEST FIXTURE1 JB
4201 DSGA-3
TEST FIXTURE 1 FLOW METER CONNECTOR
2311
DSGA-150
DSGA-3
TSGA-150
4001
2SA-19
MSCA-44
FSGA-9
2SA-14
2SA-10
MSCA-30
4401
DSGA-9
TSGA-9
DSGA-23
4186 DSGA-3
GUIDANCE HEATER CONTROLLER 26
(2)2SA-10
(3) 2SA-19
4126 2SA-7
4022
GUIDANCE PACKAGE TEST FIXTURE 2 JB (ALIGN ROOM)
4202 DSGA-3
TEST FIXTURE 2 FLOW METER CONNECTOR
2312
DSGA-150
DSGA-3
TSGA-150
F&M SWITCHBOARD
4003
MSCA-44
(3) 2SA-10
2SA-14
MSCA-19
DSGA-4
(3) 2SA-19
GUIDANCE CHECKOUT COMPUTER MK137 MOD 1
4403
DSGA-4
TSGA-9
TSGA-14
DSGA-4
DSGA-9
DSGA-23
4405
WORKBENCH 1
DSGA-9
(2)DSGA-14
DSGA-30
4406
WORKBENCH 2
TSGA-30
TSGA-200
4407
(3) 10 KVA 450/120V 1Ø 60 CPS TRANSFORMERS
DSGA-4
DSGA-9
4409
MK4 TEST RACK
402
TSGA-200
SHIP SERVICE SWITCHBOARD 1SB 450 V 60 CPS 3Ø BUS
SEE NOTE 8
401
TSGA-60
403
TSGA-200
EMERGENCY SWITCHBOARD 450 V 60 CPS 3Ø BUS
IC SWITCHBOARD 120 V 400 CPS 3Ø BUS

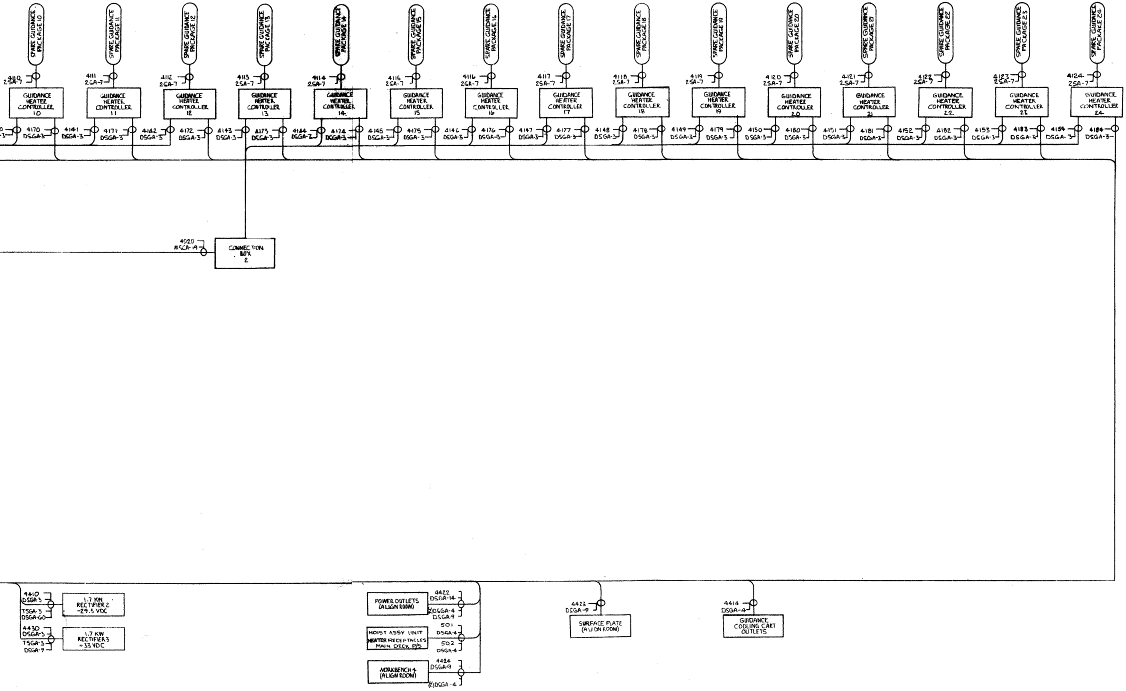
SPARE GUIDANCE PACKAGE 10
4110
2SA-7
GUIDANCE HEATER CONTROLLER 10
4170
DSGA-3
SPARE GUIDANCE PACKAGE 11
4111
2SA-7
GUIDANCE HEATER CONTROLLER 11
4141
DSGA-3
4171
DSGA-3
SPARE GUIDANCE PACKAGE 12
4112
2SA-7
GUIDANCE HEATER CONTROLLER 12
4142
DSGA-3
4172
DSGA-3
SPARE GUIDANCE PACKAGE 13
4113
2SA-7
GUIDANCE HEATER CONTROLLER 13
4143
DSGA-3
4173
DSGA-3
SPARE GUIDANCE PACKAGE 14
4114
2SA-7
GUIDANCE HEATER CONTROLLER 14
4144
DSGA-3
4174
DSGA-3
SPARE GUIDANCE PACKAGE 15
4115
2SA-7
GUIDANCE HEATER CONTROLLER 15
4145
DSGA-3
4175
DSGA-3
SPARE GUIDANCE PACKAGE 16
4116
2SA-7
GUIDANCE HEATER CONTROLLER 16
4146
DSGA-3
4176
DSGA-3
SPARE GUIDANCE PACKAGE 17
4117
2SA-7
GUIDANCE HEATER CONTROLLER 17
4147
DSGA-3
4177
DSGA-3
SPARE GUIDANCE PACKAGE 18
4118
2SA-7
GUIDANCE HEATER CONTROLLER 18
4148
DSGA-3
4178
DSGA-3
SPARE GUIDANCE PACKAGE 19
4119
2SA-7
GUIDANCE HEATER CONTROLLER 19
4149
DSGA-3
4179
DSGA-3
SPARE GUIDANCE PACKAGE 20
4120
2SA-7
GUIDANCE HEATER CONTROLLER 20
4150
DSGA-3
4180
DSGA-3
SPARE GUIDANCE PACKAGE 21
4121
2SA-7
GUIDANCE HEATER CONTROLLER 21
4151
DSGA-3
4181
DSGA-3
SPARE GUIDANCE PACKAGE 22
4122
2SA-7
GUIDANCE HEATER CONTROLLER 22
4152
DSGA-3
4182
DSGA-3
SPARE GUIDANCE PACKAGE 23
4123
2SA-7
GUIDANCE HEATER CONTROLLER 23
4153
DSGA-3
4183
DSGA-3
SPARE GUIDANCE PACKAGE 24
4124
2SA-7
GUIDANCE HEATER CONTROLLER 24
4154
DSGA-3
4184
DSGA-3
4020
MSCA-19
CONNECTION BOX 2
4410
DSGA-3
TSGA-3
DSGA-60
1.7 KW RECTIFIER 2 -29.5 VDC
4430
DSGA-3
TSGA-3
DSGA-9
1.7 KW RECTIFIER 3 +33 VDC
POWER OUTLETS (ALIGN ROOM)
4422
DSGA-14
(2)DSGA-4
DSGA-9
HOIST ASSY UNIT HEATER RECEPTACLES MAIN DECK P/S
501
DSGA-4
502
DSGA-4
WORKBENCH 4 (ALIGN ROOM)
4424
DSGA-9
(2)DSGA-4
4423
DSGA-9
SURFACE PLATE (ALIGN ROOM)
4414
DSGA-4
GUIDANCE COOLING CART OUTLETS

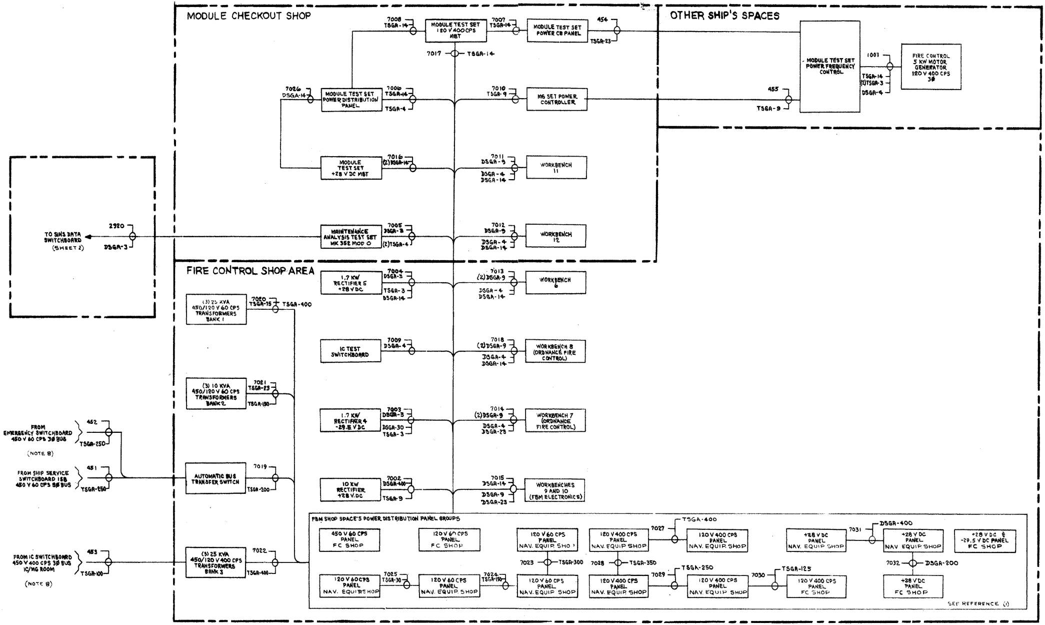
MODULE CHECKOUT SHOP
OTHER SHIP'S SPACES
FIRE CONTROL SHOP AREA
7008 TSGA-14
MODULE TEST SET 120 V 400 CPS MBT
7007 TSGA-14
MODULE TEST SET POWER CB PANEL
454 TSGA-23
MODULE TEST SET POWER FREQUENCY CONTROL
1001 TSGA-14 (2) TSGA-3 DSGA-4
FIRE CONTROL 5 KW MOTOR GENERATOR 120 V 400 CPS 3Ø
455 TSGA-9
7017 TSGA-14
7026 DSGA-14
MODULE TEST SET POWER DISTRIBUTION PANEL
7006 TSGA-14 TSGA-4
7010 TSGA-9
MG SET POWER CONTROLLER
MODULE TEST SET +28 V DC MBT
7016 (2) DSGA-14
7011 DSGA-9 DSGA-4 DSGA-14
WORKBENCH 11
TO SINS DATA SWITCHBOARD (SHEET 2)
2920 DSGA-3
MAINTENANCE ANALYSIS TEST SET MK 352 MOD O
7005 DSGA-3 (2) TSGA-4
7012 DSGA-9 DSGA-4 DSGA-14
WORKBENCH 12
1.7 KW RECTIFIER 5 +28 V DC
7004 DSGA-3 TSGA-3 DSGA-14
7013 (2) DSGA-9 DSGA-4 DSGA-14
WORKBENCH 6
(3) 25 KVA 450/120 V 60 CPS TRANSFORMERS BANK 1
7020 TSGA-75 TSGA-400
IC TEST SWITCHBOARD
7009 DSGA-4
7018 (2) DSGA-9 DSGA-4 DSGA-14
WORKBENCH 8 (ORDNANCE FIRE CONTROL)
(3) 10 KVA 450/120 V 60 CPS TRANSFORMERS BANK 2
7021 TSGA-23 TSGA-150
1.7 KW RECTIFIER 4 -29.5 V DC
7003 DSGA-3 DSGA-30 TSGA-3
7014 (2) DSGA-9 DSGA-4 DSGA-23
WORKBENCH 7 (ORDNANCE FIRE CONTROL)
FROM EMERGENCY SWITCHBOARD 450 V 60 CPS 3Ø BUS
452 TSGA-250
(NOTE 8)
FROM SHIP SERVICE SWITCHBOARD 1SB 450 V 60 CPS 3Ø BUS
451 TSGA-250
AUTOMATIC BUS TRANSFER SWITCH
7019 TSGA-200
10 KW RECTIFIER +28 V.DC
7002 DSGA-400 TSGA-9
7015 DSGA-14 DSGA-9 DSGA-23
WORKBENCHES 9 AND 10 (FBM ELECTRONICS)
FROM IC SWITCHBOARD 450 V 400 CPS 3Ø BUS IC/MG ROOM
453 TSGA-100
(NOTE 8)
(3) 25 KVA 450/120 V 400 CPS TRANSFORMERS BANK 3
7022 TSGA-400
FBM SHOP SPACE'S POWER DISTRIBUTION PANEL GROUPS
450 V 60 CPS PANEL FC SHOP
120 V 60 CPS PANEL FC SHOP
120 V 60 CPS PANEL NAV. EQUIP. SHOP
7023 TSGA-300
120 V 400 CPS PANEL NAV. EQUIP. SHOP
7028 TSGA-350
7027 TSGA-400
120 V 400 CPS PANEL NAV. EQUIP. SHOP
+28 V DC PANEL NAV. EQUIP. SHOP
7031 DSGA-400
+28 V DC PANEL NAV. EQUIP. SHOP
+28 V DC & -29.5 V DC PANEL FC SHOP
7032 DSGA-200
120 V 60 CPS PANEL NAV. EQUIP. SHOP
7025 TSGA-30
120 V 60 CPS PANEL NAV. EQUIP. SHOP
7024 TSGA-150
120 V 60 CPS PANEL NAV. EQUIP. SHOP
120 V 400 CPS PANEL NAV. EQUIP. SHOP
7029 TSGA-250
120 V 400 CPS PANEL NAV. EQUIP. SHOP
7030 TSGA-125
120 V 400 CPS PANEL FC SHOP
+28 V DC PANEL FC SHOP
SEE REFERENCE (1)